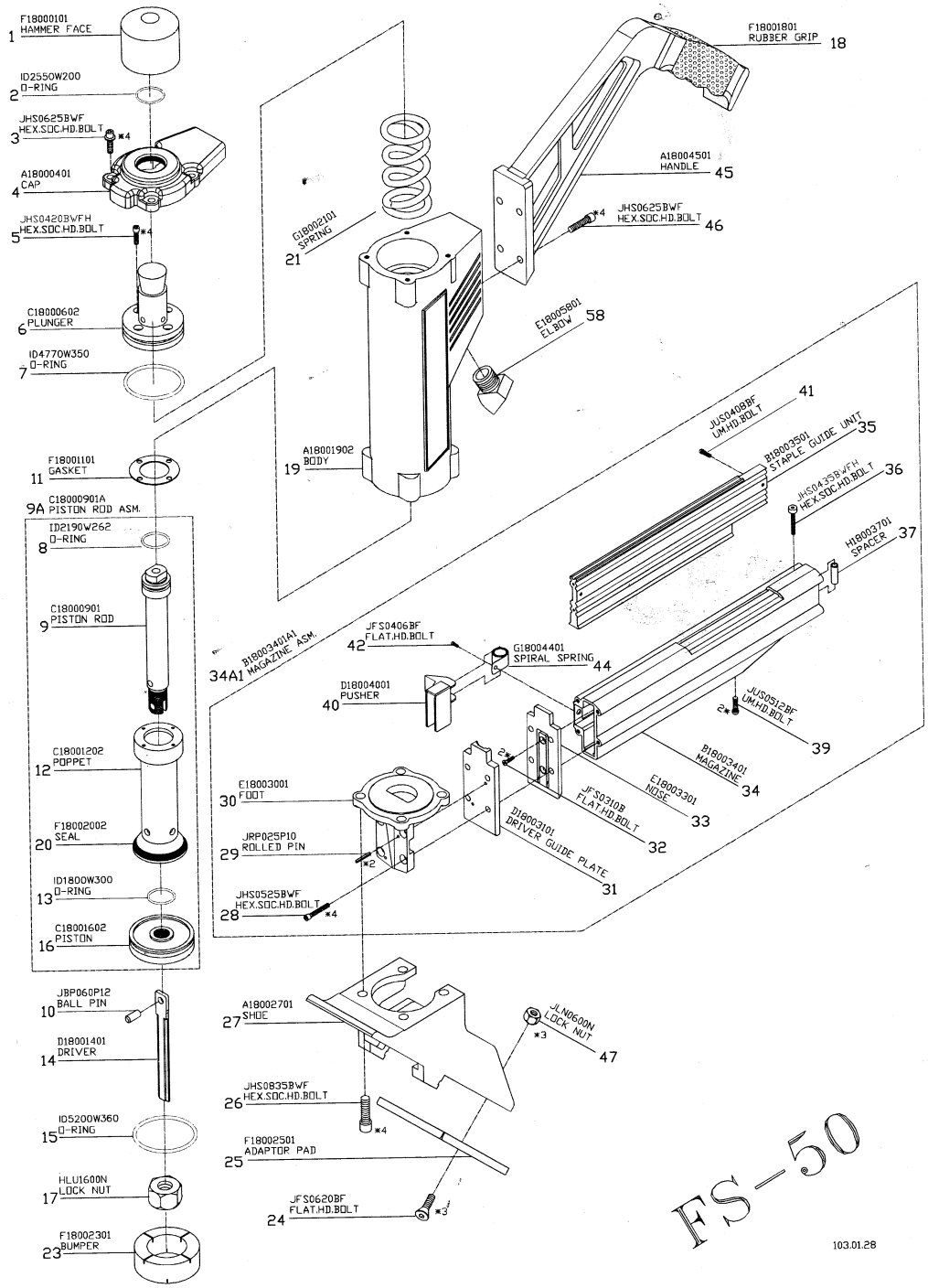
1 F18000101 HAMMER FACE
2 ID2550W200 O-RING
3 JHS0625BWF HEX.SOC.HD.BOLT *4
4 A18000401 CAP
5 JHS0420BWFH HEX.SOC.HD.BOLT *4
6 C18000602 PLUNGER
7 ID4770W350 O-RING
11 F18001101 GASKET
9A C18000901A PISTON ROD ASM.
8 ID2190W262 O-RING
9 C18000901 PISTON ROD
12 C18001202 POPPET
20 F18002002 SEAL
13 ID1800W300 O-RING
16 C18001602 PISTON
10 JBP060P12 BALL PIN
14 D18001401 DRIVER
15 ID5200W360 O-RING
17 HLU1600N LOCK NUT
23 F18002301 BUMPER
21 G18002101 SPRING
19 A18001902 BODY
18 F18001801 RUBBER GRIP
45 A18004501 HANDLE
46 JHS0625BWF HEX.SOC.HD.BOLT *4
58 E18005801 ELBOW
41 JUS0408BF UM.HD.BOLT
35 B18003501 STAPLE GUIDE UNIT
36 JHS0425BWFH HEX.SOC.HD.BOLT
37 H18003701 SPACER
34A1 B18003401A1 MAGAZINE ASM.
42 JFS0406BF FLAT.HD.BOLT
44 G18004401 SPIRAL SPRING
40 D18004001 PUSHER
39 JUS0512BF UM.HD.BOLT *2
34 B18003401 MAGAZINE
33 E18003301 NOSE
32 JFS0310B FLAT.HD.BOLT *2
31 D18003101 DRIVER GUIDE PLATE
30 E18003001 FOOT
29 JRP025P10 ROLLED PIN *2
28 JHS0525BWF HEX.SOC.HD.BOLT *4
27 A18002701 SHOE
47 JLN0600N LOCK NUT *3
26 JHS0835BWF HEX.SOC.HD.BOLT *4
25 F18002501 ADAPTOR PAD
24 JFS0620BF FLAT.HD.BOLT *3
FS-50
103.01.28